OWNERS MANUAL

ULTRARIDE® AIR CONTROL KIT

800M1032 (Light Duty)
800M1033 (Commercial Duty)

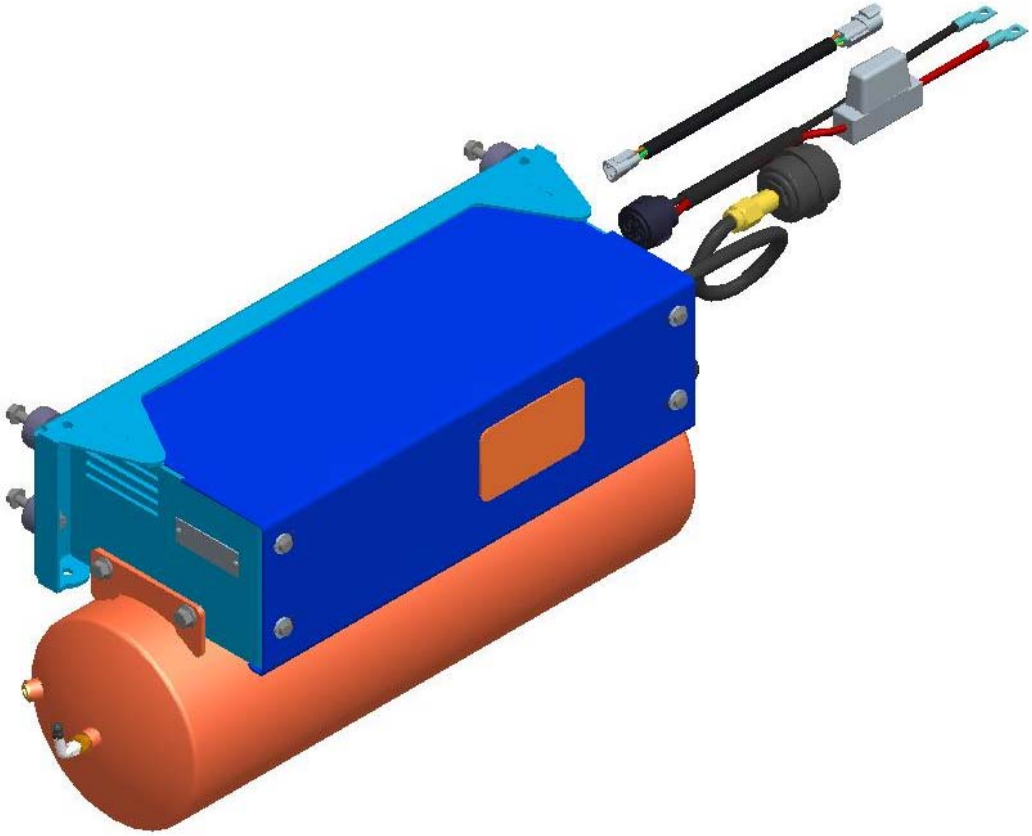

Questions ? Contact this Professional Installer :

Company : _____

_____

Phone : _____

Installer : _____ Date : _____

MAY 10, 2013
80001598

INSTALLATION INSTRUCTIONS INDEX

MISCELLANEOUS INFORMATION

APPENDIX A

APPENDIX B

1. INTRODUCTION

IMPORTANT! It is important that the entire installation instructions be read thoroughly before proceeding with the installation.

The ULTRARIDE® AIR CONTROL KIT is intended ONLY to provide a pressurized air supply for Link ULTRARIDE® Chassis Suspensions and control the dump action of the suspension.

Any other use of these Air Control Products is not authorized. Link accepts no warranty responsibility for damage resulting from misuse.

Items included with the air kit (See Fig. 1-1):

- **Compressor Box.** Contains the compressor(s), pressure switches, and all other components necessary for the operation of the air kit.
- **Air Tank.** Provides a reserve source of pressurized air to manage compressor run time and dump recovery time.
- **2 Wiring Harnesses.** The wiring harnesses connect the Main Air Control Unit to both the battery to provide power for the compressor(s) and cab controls to control the function of the air kit.
- **Airline, Corrugated Loom, & Cable Ties & Mounting Hardware.** Extra airline and corrugated loom is included with this kit to connect it to the UltraRide® suspension system and protect the airline from wear. Cable ties are also included to properly secure all loose wires and airline.
- **Air Spring Fittings.** (2) elbow fittings are included, to be installed in airspring ports.
- **This Instruction Manual.**

Items NOT included with the air kit

- **Cab Control Panel.** Many custom installers wish to use their own custom cab switches and lights. For this reason, the

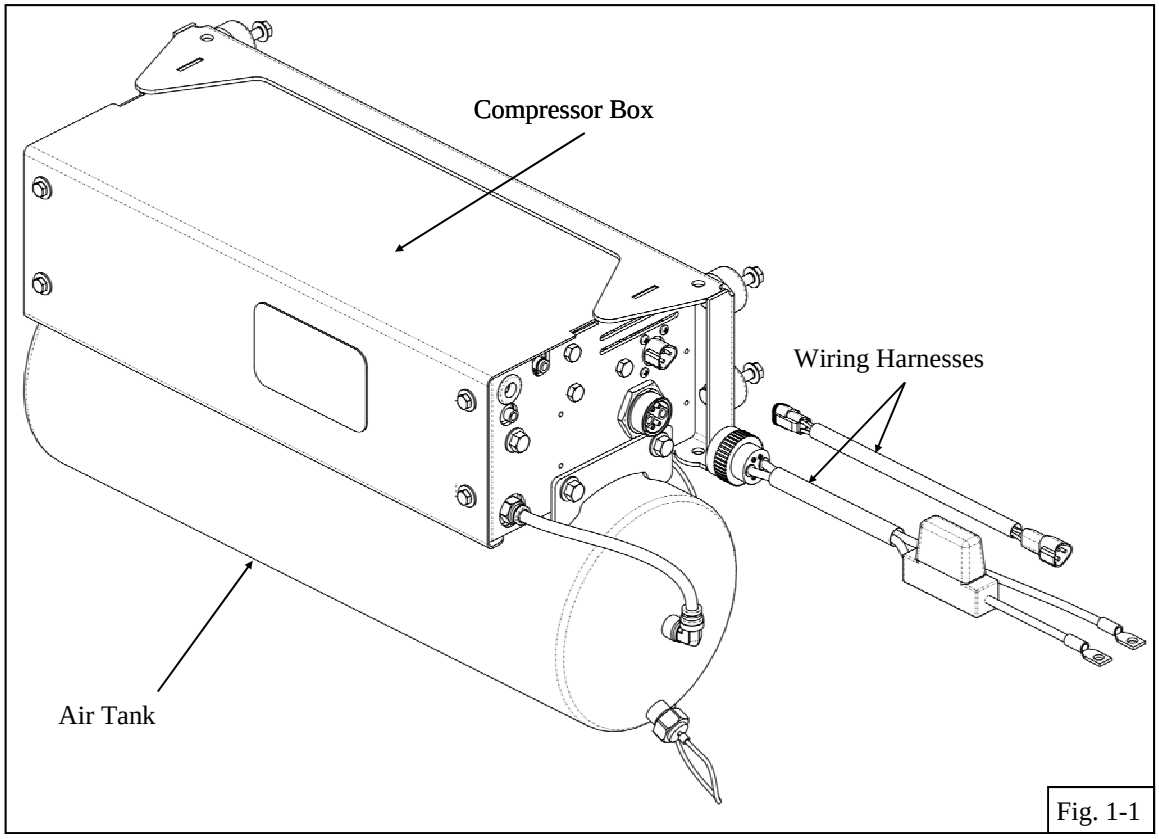

Fig. 1-1

PRODUCT INSTALLER RESPONSIBILITIES

- Installer is responsible for installing the product in accordance with Link Mfg. specifications and installation instructions.
- Installer is responsible for providing proper vehicle components and attachments as well as required or necessary clearance for suspension components, axles, wheels, tires, and other vehicle components to ensure a safe and sound installation and operation.
- Installer is responsible for advising the owner of proper use, service and maintenance required by the product and for supplying maintenance and other instruction as readily available from Link Mfg..

SAFETY SYMBOLS, TORQUE SYMBOL, and NOTES

⚠	**This is the safety alert symbol. It is used to alert you to potential personal injury hazards. Obey all safety messages that follow this symbol to avoid possible injury or death.**
⚠ **WARNING**	**WARNING indicates a potentially hazardous situation which, if not avoided, could result in death or serious injury.**
⚠ **CAUTION**	**CAUTION indicates a potentially hazardous situation which, if not avoided, could result in minor or moderate injury.**
CAUTION	**CAUTION used without the safety alert symbol indicates a potentially hazardous situation which, if not avoided, may result in property damage.**

	The torque symbol alerts you to tighten fasteners to a specified torque value.
NOTE:	**A Note provides information or suggestions that help you correctly perform a task.**
⚡	**The electrical symbol indicates the presence of electric shock hazards which, if not avoided, may result in injury to personnel or damage to equipment.**

Proper tightening of mounting nuts are required for proper operation. Need for proper Specific Torque requirements is indicated by wrench symbol. Failure to maintain proper torque can cause component failure resulting in accident with consequent injury.

Fig. 1-2

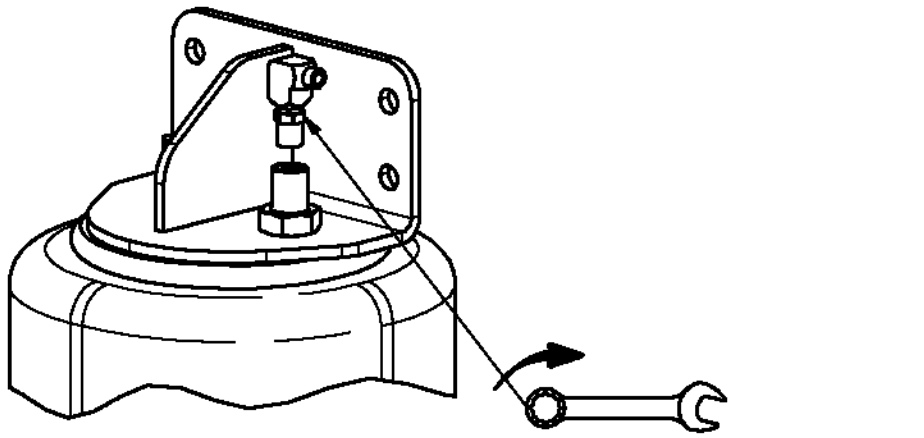

IMPORTANT! Prior to Air system installation, air fittings will need to be installed into airsprings as shown in Fig. 1-2

2. AIR LINE ROUTING SCHEMATICS

Air & Electrical Connections on the Air Kit

The UltraRide® Air Control Kit provides 2 air outlet ports for connection to an UltraRide® suspension system (See Figure 2-1).

- The Air Supply Port provides a supply of air directly from the air supply tank. It is typically connected to the SUPPLY or INLET Port on the height control valve(s).
- The Pilot Supply Port is typically connected to a dump valve on the UltraRide® suspension (if so equipped) and controls the dumping of the suspension from a switch in the cab controls.

IMPORTANT ! Thread sealant should be used on all pipe-thread fittings without pre-applied thread sealant. Failure to properly apply thread sealant will result in air system leaks and reduced system performance and/or failure.

UltraRide® Air Control Kit Connections

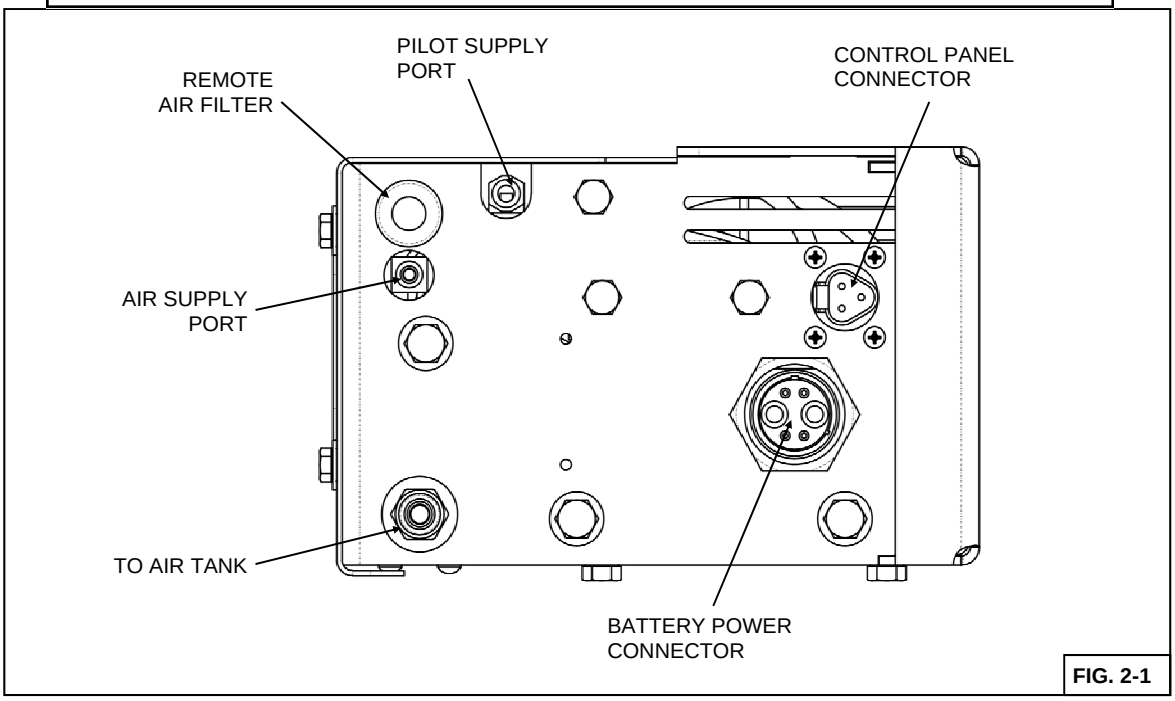

FIG. 2-1

Connecting the Height Control Valves to the Air Kit

Note: UltraRide® Suspensions built before 2/25/2008 used a Haldex brand height control valve. UltraRide® Suspensions built after 2/25/2008 use a Barksdale brand height control valve. **For reference, schematics for both valves are shown in this manual**.

Figures. 2-2 & 2-3 show the **single** valve plumbing schematic for Haldex and Barksdale HCVs respectively. If installing the UltraRide® Air Control Kit on a suspension with a single HCV, follow these schematics.

Figures. 2-4 & 2-5 show the **dual** valve plumbing schematic for Haldex and Barksdale HCVs

Plumbing Diagram for **Single Haldex** Height Control Valve

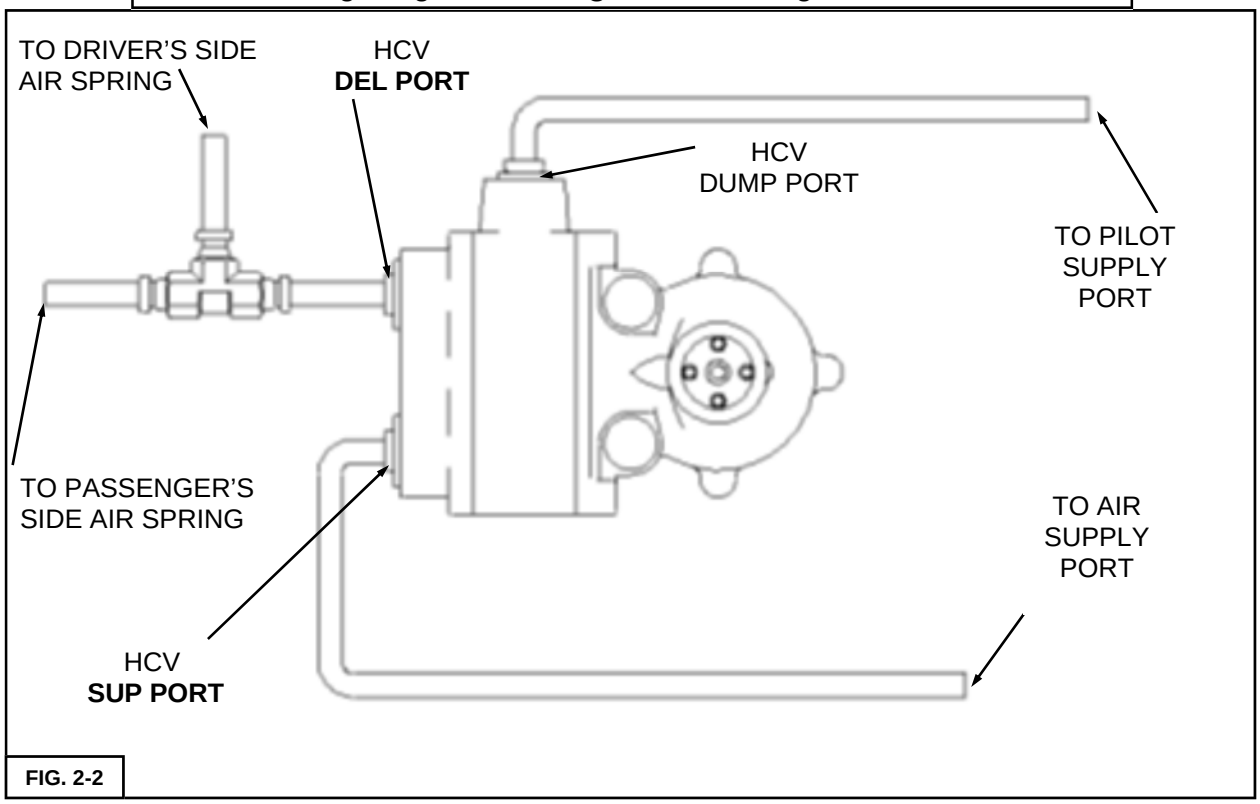

FIG. 2-2

Plumbing Diagram for **Single Barksdale** Height Control Valve

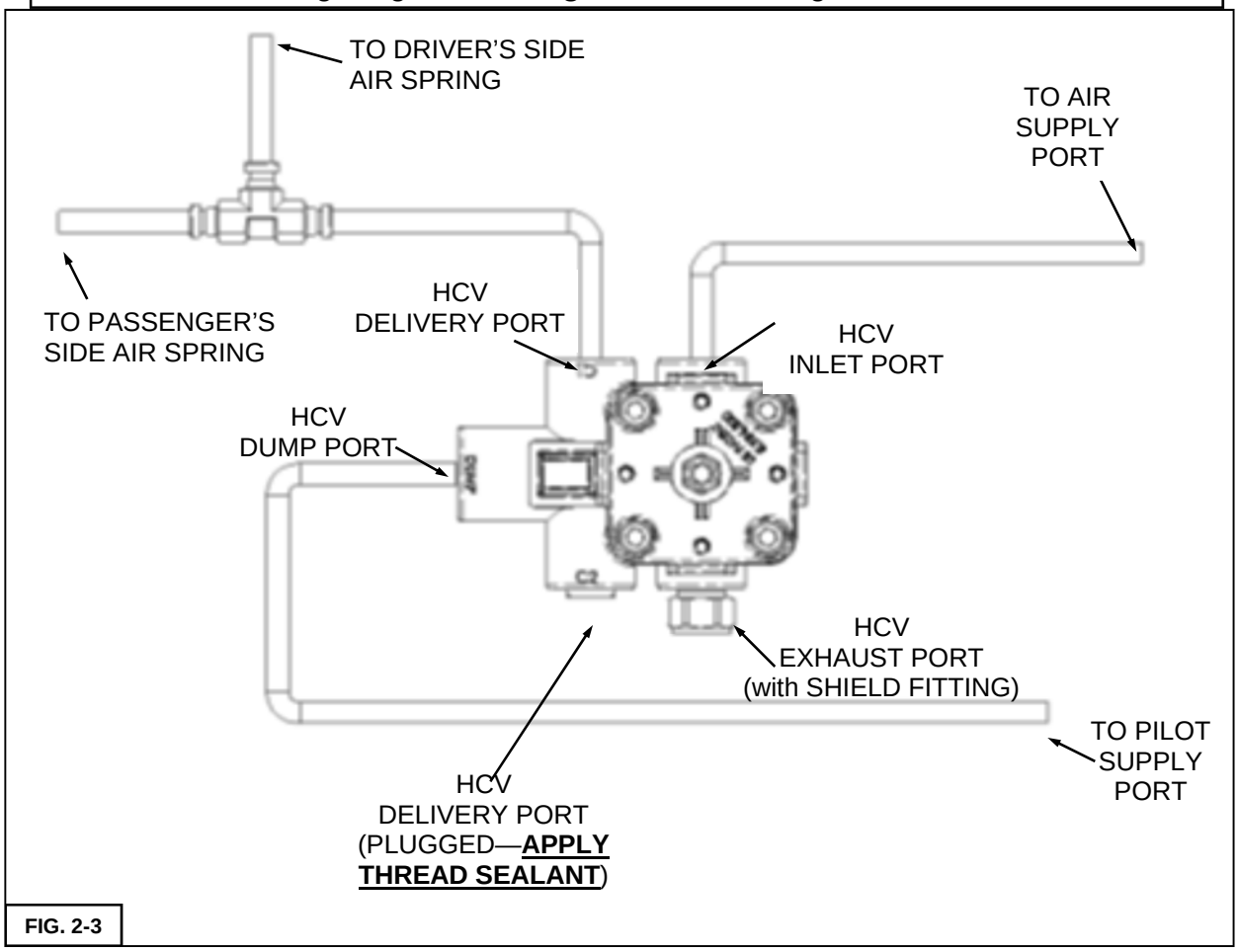

FIG. 2-3

Plumbing Diagram for **Dual Haldex** Height Control Valves

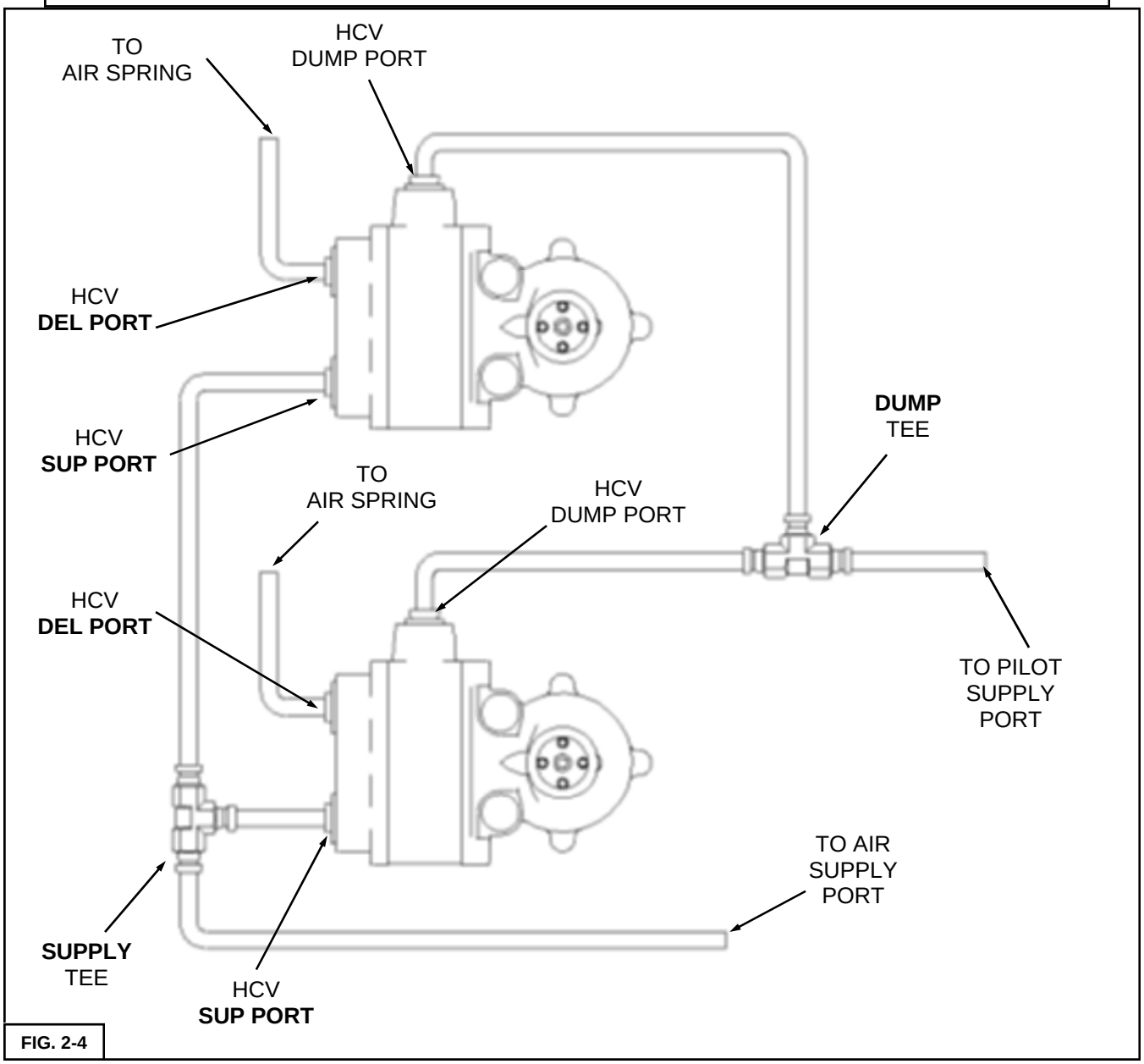

FIG. 2-4

Plumbing Diagram for **Dual Barksdale** Height Control Valves

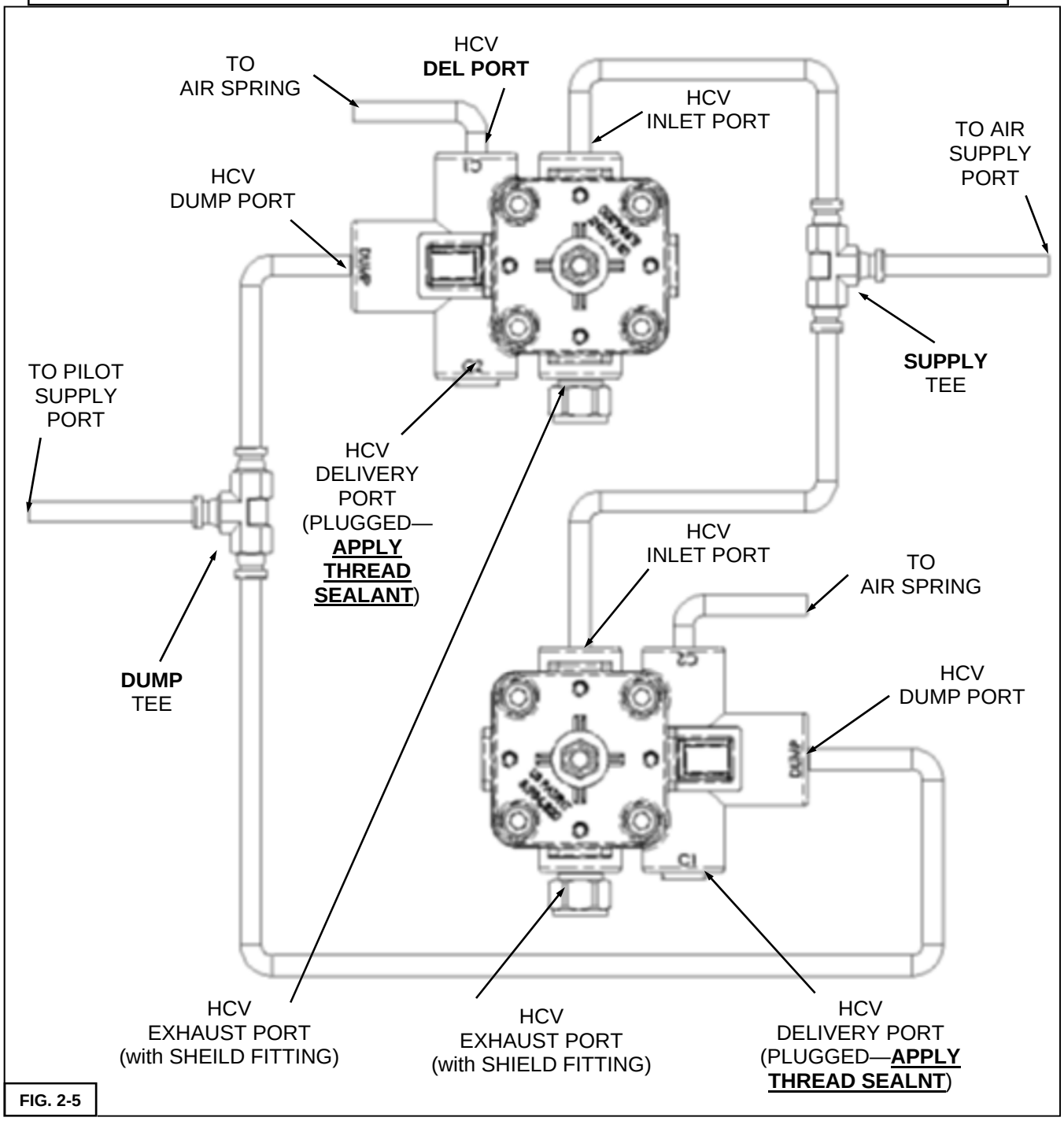

FIG. 2-5

3. MOUNTING THE AIR SYSTEM

The UltraRide® Air Kits have been designed for maximum mounting flexibility and ease of installation, allowing them to be used in a variety of applications and body styles. They can be mounted as a complete, one-piece unit OR the compressor box and air tank can be separated and mounted separately where mounting space is limited.

Mounting the Air Kit as a one-piece unit

- The UltraRide® Air Kit is assembled and shipped as a one-piece unit ready for mounting to the vehicle.
- Mount the air kit to the side of the frame or any other suitable location as shown in Fig 3-1. Use the supplied rubber isolators and 5/16 nuts and bolts to fasten the kit. (Torque to 15-20 FT-LBS). Some drilling may be required. **Do not over tighten the fasteners** to ensure proper clearance and isolation from the rubber isolators.

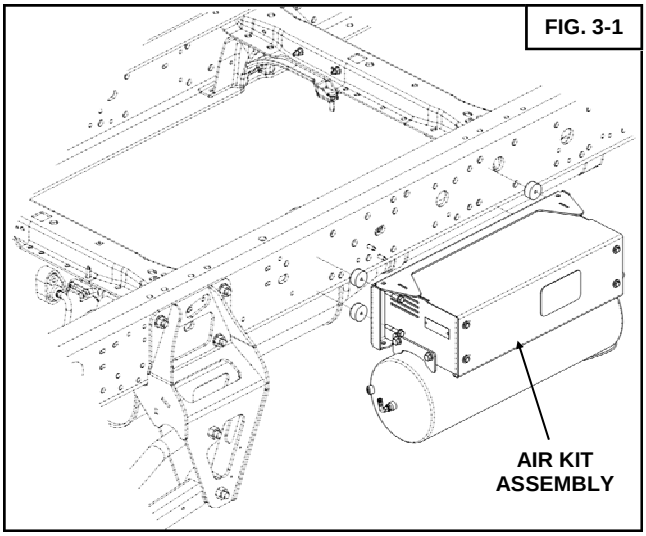

FIG. 3-1

Separating the Air Kit

- The UltraRide® Air Kit can also be separated to mount the compressor box and air tank in different locations.
- Separate the compressor box and air tank by removing the 4 - 3/8" bolts attaching them.
- Mount the compressor box and air tank in any convenient location on the chassis, using the supplied rubber isolators and 5/16 nuts and bolts (Torque to 15-20 FT-LBS). Either the 4 mount holes on the rear of the compressor box, or the 3 holes on the bottom of the compressor box can be used, depending on your preferred mounting configuration and orientation.
- Connect the compressor box and air tank with 3/8" DOT airline (see Fig 3-2).
- The compressor box and air tank can be mounted in any orientation (up, down , sideways, etc.), so long as the drain valve on the air tank is at the bottom to allow proper drainage of moisture in the tank.

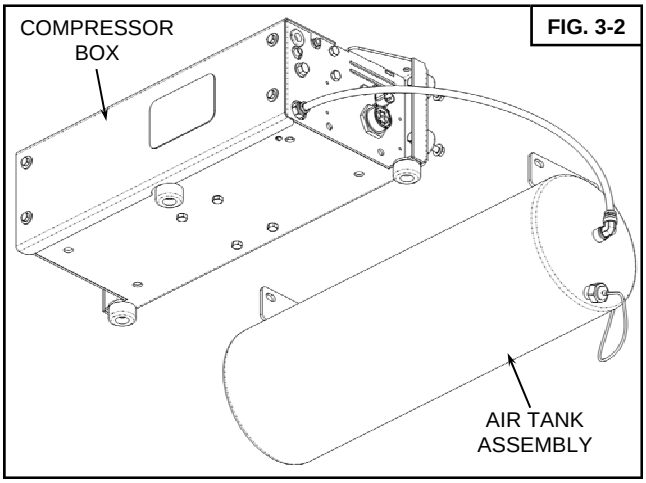

FIG. 3-2

Mounting the Kit Inside the Frame Rail

- With the use of the 80001515 adapter bracket, the UltraRide® Air Kit can be mounted inside the frame rail, providing even more flexibility in mounting options to accommodate a variety of installs (see Fig 3-3). The 80001515 adapter bracket is not included with the UltraRide® Air Kit. Contact your Link Suspension representative for availability of the 80001515 adapter bracket.

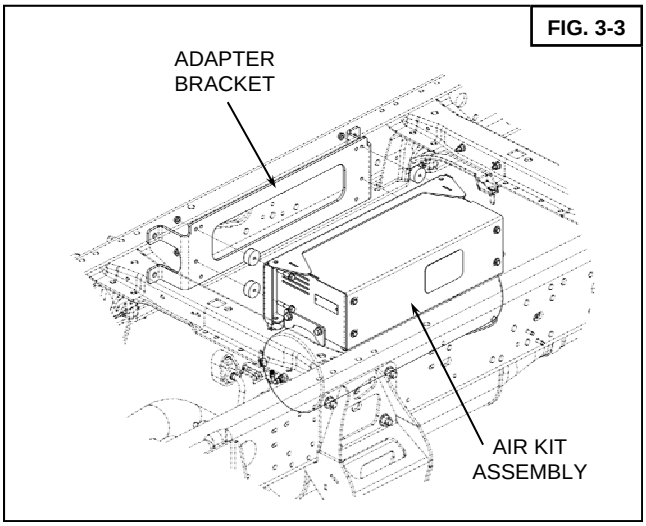

FIG. 3-3

Air Filter Location Options (800M1033 Air Kit only)

- The air filter for the 800M1033 (heavy duty compressor) UltraRide® Air Kit can be installed in 2 ways: either remotely via the included 1/2” airline and fittings or directly to the compressor head.

Remote mounting the Air Filter (Fig 3-4)

- The 800M1033 air kit is shipped from the factory with fittings, airline, and filter installed for a remote air filter location. This allows the air filter to be located in a body or cab compartment for ease of serviceability and to provide a dust-free environment, increasing durability and life of the filter and compressor.
- **NEVER PLACE THE FILTER UNDER THE CHASSIS** where it will be directly exposed to moisture, dust, and debris.

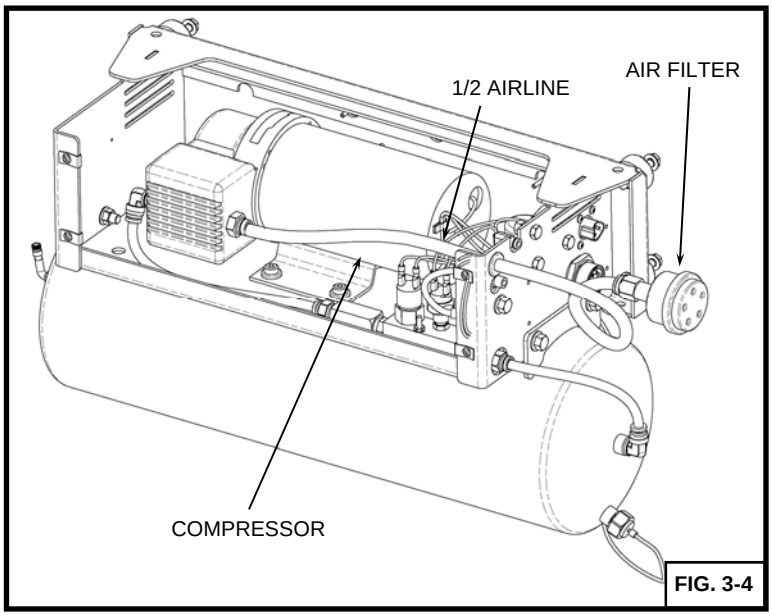

FIG. 3-4

Direct mounting the Air Filter (Fig 3-5)

- If desired, the air filter can also be mounted directly to the compressor head inside the compressor box. Simply remove the included airline fittings and screw the filter directly to the compressor head intake port.

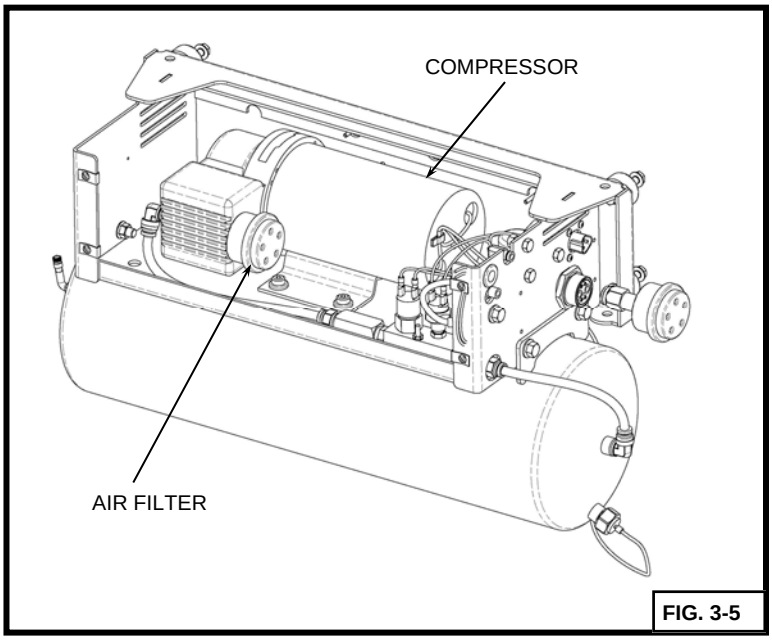

FIG. 3-5

CAUTION! NEVER USE THREAD SEALANT ANYWHERE ON THE INTAKE PATH OF THE COMPRESSOR! Doing so may lead to premature compressor failure due to sealant ingestion.

4. ELECTRICAL SYSTEM

CAUTION! All wiring should be routed and secured neatly to avoid any functional or visual issues. Under hood and under-body wire routings should be clear of sharp edges (3/4 inches minimum) and direct sources of heat (4 inches minimum). Wiring should not be routed through wheel well areas where it may be damaged by tire or road debris, and it should not be routed over the exhaust system. Wiring should not contact the brake lines or fuel lines. Disconnect the battery cables before servicing any electrical components.

The included wiring harnesses for the UltraRide® Air Kit uses heavy gage wiring and industry standard, sealed connectors, allowing great flexibility in routing and placement options. The use of industry standard connectors allows these harnesses to be customized to fit your application by modifying the length of the harnesses or even making your own harnesses. See the electrical schematic in Fig. 4-4 for harness specifications and details to customize your own harness.

1. Attach the Power Harness to the Air Control Box routing it along the frame to the battery. **Do not connect wires to battery at this point. Only connect the battery AFTER the rest of the installation has been completed.** See Figure 4-1 for details. Note: The battery + wire lead contains a 50A Maxi-Fuse for circuit protection.

2. Route the Control Harness into the cab, where it will be connected to the air kit controls for easy, in-cab operator control. This can be accomplished by properly routing the harness to the driver side of the bulkhead and either passing through an existing grommeted hole behind the dash, or drilling an appropriate hole in the bulkhead to pass the harness through. **NOTE:** use a grommet around the harness and in the bulkhead to reduce noise transmission, keep the harness away from the sharp edges, and seal the cab area against dirt and moisture. For more detailed control

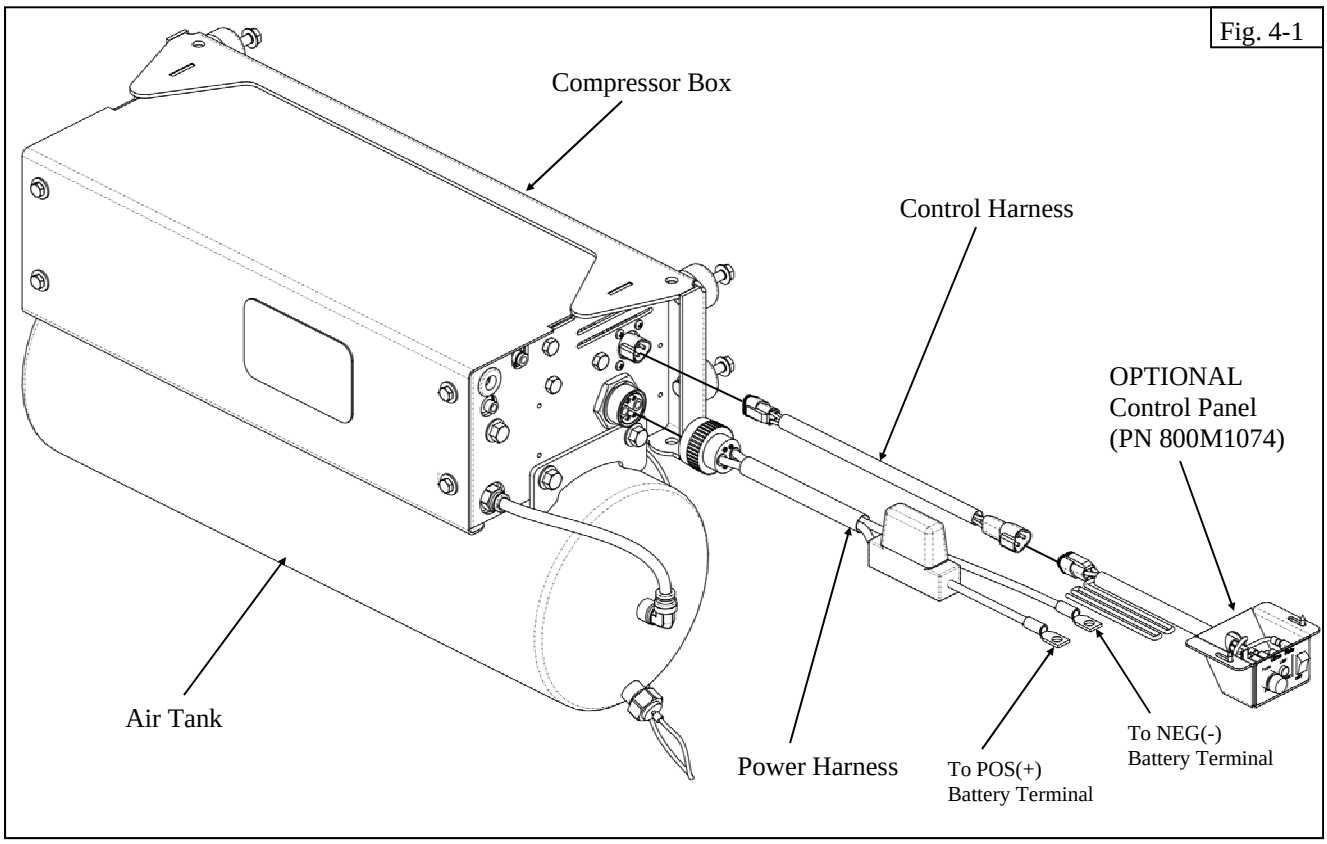

Fig. 4-1

harness routing options, see Appendix A for Ford vehicles or Appendix B for GMC vehicles.

If using the optional 800M1074 Control Panel (sold separately):

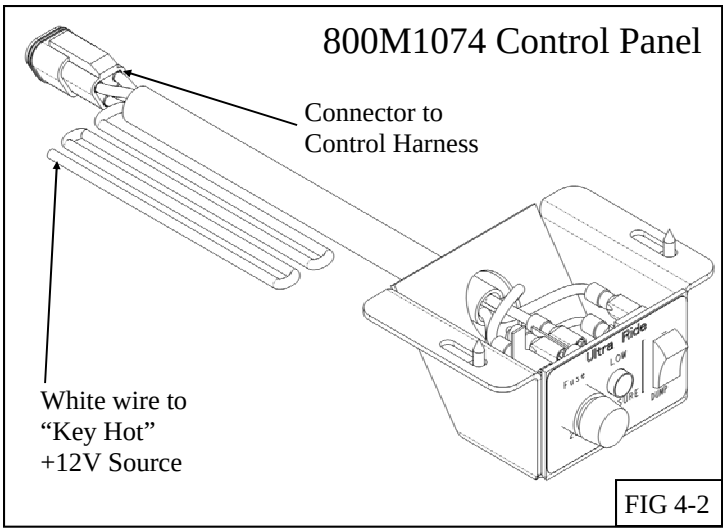

FIG 4-2

1. The Control Panel should be mounted somewhere between the driver and passenger seating areas to keep it out of the Passenger Protection Zone (fig. 4-3).

2. Connect the Control Harness to the Control Panel pigtail.

3. The **white wire** included with the Control Panel must be connected to a "key hot" signal wire so that it only receives +12V power when the ignition key is in the "RUN" position. This will ensure that the Air Control Kit only runs when the key is on, preventing the batteries from draining. After locating a suitable "key hot" wire, connect it to the white control panel wire. For more details on locating a suitable "key hot" wire for your application, see Appendix A for Ford vehicles or Appendix B for GMC vehicles.

If using your own, custom control panel switches and lights:

1. A 2A fuse, low pressure warning indicator light, and dump switch must be installed to complete the control harness circuit. See fig. 4-4 for details on how to wire these items and connector information to connect to the control harness. **Note: the use of a low pressure warning device (such as a warning light), is REQUIRED** and should be included in any custom control interface design. Failure to do so may result in damages not covered by warranty.

Use cable ties to secure wires and to keep harnesses away from all hazardous objects, this is especially important in the engine compartment. Use rubber grommets anywhere wires are to be run through sheet metal panels. Also make sure the wire harness is secured such as not to allow contact with any heat sources (e.g. exhaust).

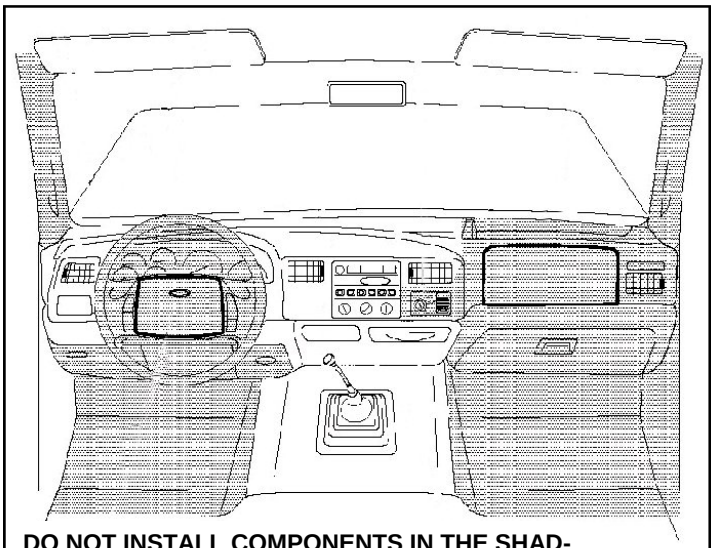
DO NOT INSTALL COMPONENTS IN THE SHADED "PASSENGER PROTECTION" AREAS

FIG. 4-3

AIR CONTROL KIT
ELECTRICAL SCHEMATIC & CABLE SPECIFICATIONS

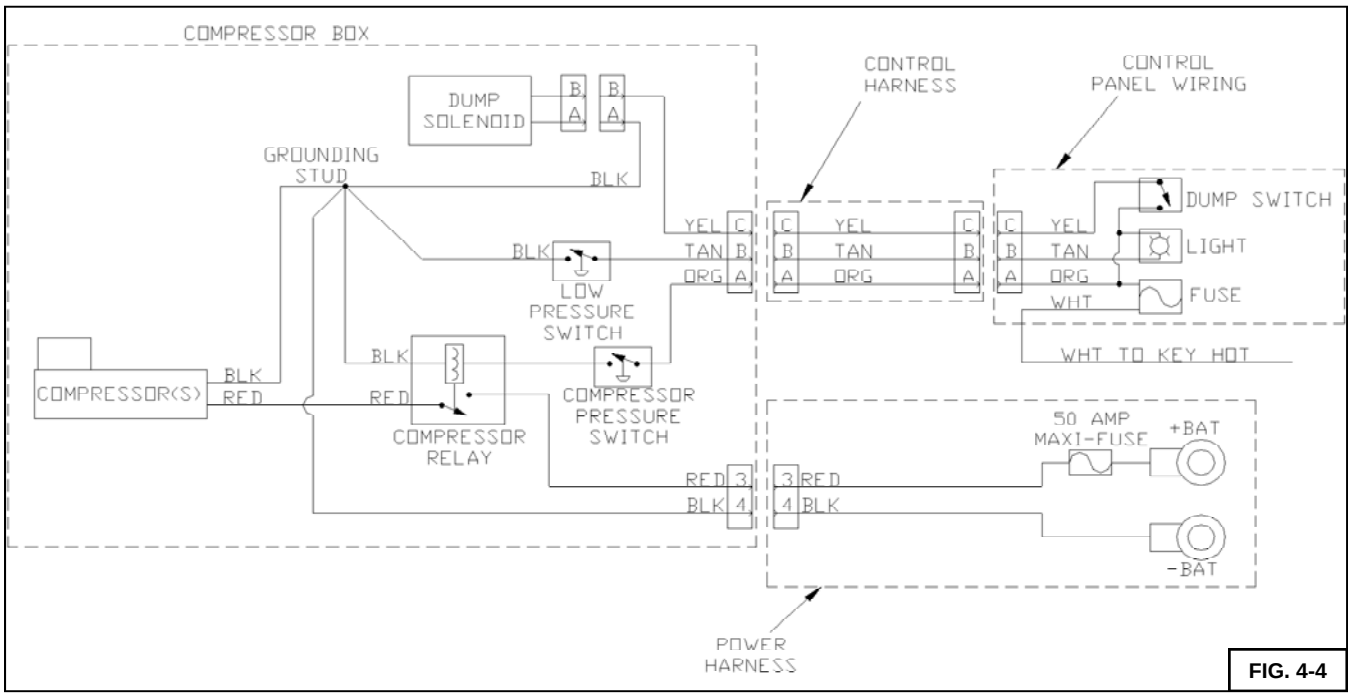

FIG. 4-4

Harness and control panel customization:

The electrical schematic in fig 4-4 should be used to troubleshoot or as a design guide when opting not to use the optional 800M1074 control panel to use your own custom fuses, switches, and warning light.

Connector information is also provided below to provide all necessary information to customize or even make your own wire harnesses for the UltraRide® Air Kit.

Control Harness Specifications:

- <u>Connector—Control Panel End:</u>
  Deutsch series DT Connector
  Housing PN: DT04-3P (QTY 1)
  Socket PN: 1060-16-0122 (QTY 3)
  Wedgelock PN: W3P (QTY 1)
  Pin A—16ga Orange Wire (‘Key Hot’ Power)
  Pin B—16ga Tan Wire (Warning Light)
  Pin C—16ga Yellow Wire (Dump Switch)

- <u>Connector—Compressor Box End:</u>
  Deutsch series DT Connector
  Housing PN: DT06-3S (QTY 1)
  Socket PN: 1062-16-0122 (QTY 3)
  Wedgelock PN: W3S
  Pin A—16ga Orange Wire (‘Key Hot’ Power)
  Pin B—16ga Tan Wire (Warning Light)
  Pin C—16ga Yellow Wire (Dump Switch)

Power Harness Specifications:

- <u>Connector—Compressor Box End:</u>
  Deutsch HDP series Connector
  Housing PN: HDP26-18-6SN (QTY 1)
  Pin PN: 0462-203-04141 (QTY 2)
  Plug PN: 114017 (QTY 4)
  Pins #1, #2, #5, & #6—Not used
  Pin #3—6ga Red (+12 with 50A Maxi-Fuse)
  Pin #4— 6ga Black (GND from Battery)

Control Panel Connector Specifications:

- <u>Connector:</u>
  Deutsch series DT Connector
  Housing Part Number: DT06-3S (QTY 1)
  Socket Part Number: 1062-16-0122 (QTY 3)
  Wedgelock Part Number: W3S
  Pin A—16ga Orange Wire (‘Key Hot’ Power)
  Pin B—16ga Tan Wire (Warning Light)
  Pin C—16ga Yellow Wire (Dump Switch)

5. AIR SYSTEM OPERATION

NOTE: Before operating the UltraRide® Air Kit, be sure it has been properly connected to the UltraRide® Chassis Suspension. Make sure the dump switch is OFF.

1. Using a shop air supply, fill the air tank using the schraeder valve to a pressure of 80-100 psi. This helps keep air compressor run-time to a minimum when the tank is empty.

2. Turn the ignition key to the “RUN” position. (You may wish to actually start the vehicle, to prevent draining the batteries while operating the air control kit.)

3. The compressor(s) in the air control kit should turn on, pressurizing the air tank. After a few minutes, the air compressor(s) will automatically turn off when the air tank reaches full pressure. Using a soapy water solution, check the air tank, air lines, and any connections for leaks.

4. Check the Dump function by switching the Dump switch to ON. The suspension will immediately begin to exhaust air from the air springs and begin to drop. With the dump switch ON, the air tank should not lose any pressure and the compressor(s) should NOT engage.

5. Turn the Dump switch OFF. The suspension should immediately begin to fill the air springs and then begin to lift. The compressors may engage to replenish the lost pressure in the air tank.

NOTE: The Low Pressure warning light may come on briefly when airing the suspension up again after dumping it. This is normal and requires attention only if the low pressure warning light remains on for extended periods of time.

CONTROL PANEL LAYOUT

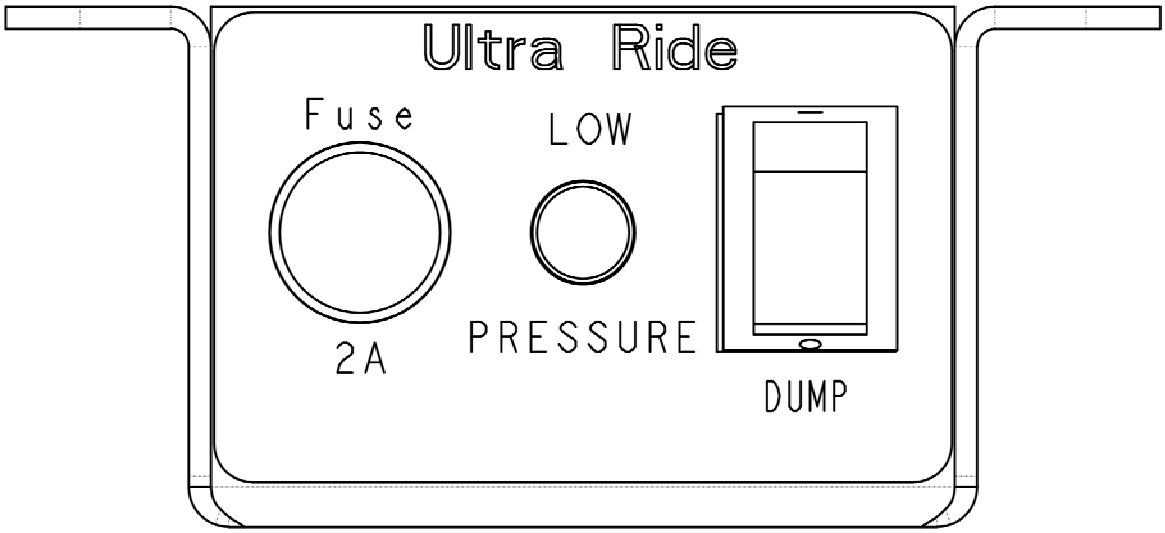

FIG. 5-1

6. SERVICE & MAINTENANCE

The UltraRide® Air Control Kit needs no lubrication and little maintenance. The following components should be checked at the time the truck is being serviced. However, immediate corrective action should be taken if a serious malfunction occurs. See Exploded Assembly on the following pages for details.

> ⚠ **CAUTION!** If maintenance or service is to be done on the air system, be sure to drain **all** air from system. Serious injury could occur if components are removed while system is full of air.

It is important to release any moisture contained within the air reservoir on a daily basis. This can be done by pulling on the cable attached to the drain valve. See Figure 6-1. Not releasing the moisture on a regular basis will cause the drain valve to not operate properly, and may cause the valves to malfunction. Excess moisture in the system can also cause premature failure of other components including the tank itself.

Even with the optional Automatic Drain Valve, It is important to manually release any moisture contained within the air reservoir weekly!

INSTALLATION & MAINTENANCE CHECK LIST

- Verify suspension function via dump and reinflation
- Check for air leaks and system integrity
- Check clearances throughout suspension motion range
- Regularly drain any tank moisture using the drain valve (See Figure 6-1).

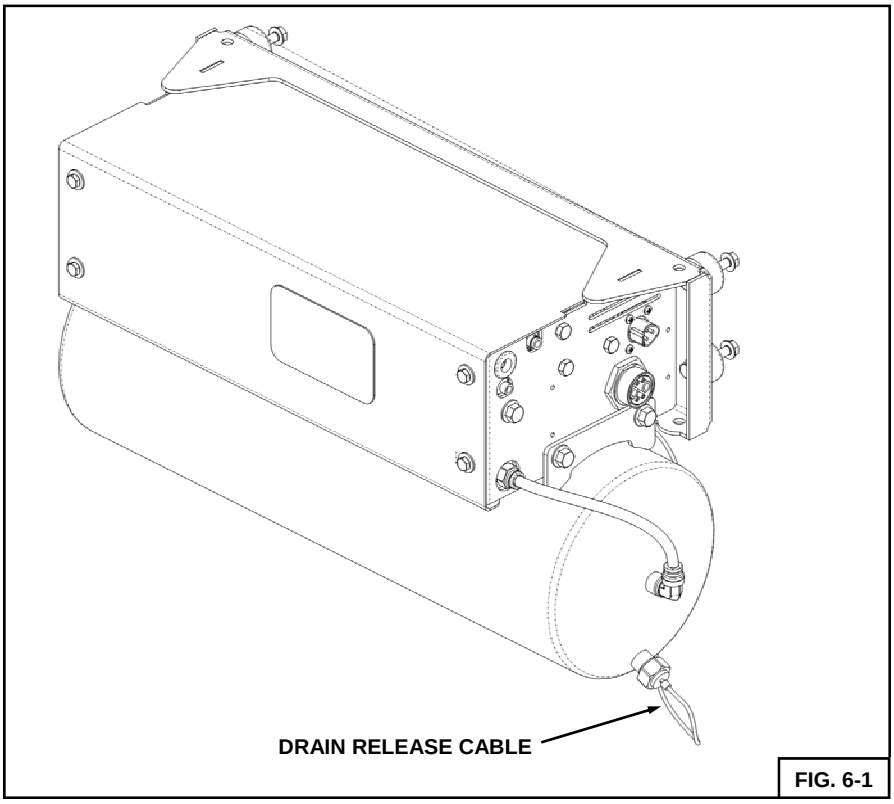

FIG. 6-1

PAGE INTENTIONALLY LEFT BLANK

UltraRide® - 800M1032
AIR CONTROL KIT PARTS LIST

ITEM	PART NUMBER	DESCRIPTION	QTY
1	1301-0533	SWITCH PRESSURE, LOW	1
2	1301-0537	VALVE-DRAIN, 20" CABLE	1
3	13010535	VALVE-SOLENOID,3-WAY	1
4	13010550	SWITCH-PRESSURE, 120/145	1
5	1302-2014	REDUCER, 1/8 F-NPT 1/4 M-NPT	2
6	1302-2016	BUSHING-REDUCER 3/8 M-NPT TO 1/4 F-NPT	1
7	1302-2077	AIR FTG / PLUG (1/4 NPT)	1
8	1302-2123	STREET TEE, 1/4 F-NPT 1/4 M-NPT	1
9	1302-5050	CONNECTOR-MALE, 3/8 TB, 3/8 NPT	1
10	1302-5091	ELBOW, 1/4 TB 1/4 M-NPT, PUSH-IN DOT	3
11	1302-5100	ELBOW, 1/4 TB 1/8 M-NPT, PUSH-IN DOT	1
12	1302-5104	ELBOW-3/8 TB, 1/4 M-NPT	1
13	1302-5140	BRANCH TEE, 1/4 TB 1/8 M-NPT, DOT, P-IN	1
14	1302-9973	EXHAUST SHIELD, 1/8 M-NPT	1
15	13029967	MANIFOLD-AIR, 3 PORT, 1/4 NPT	1
16	13029971	ASSEMBLY-HOSE, CHECK VALVE	2
17	1401-0806	1/4 X 3/4 UNC HEX CAP SCR (GR 5)	4
18	1401-1006	5/16 X 3/4 UNC HEX CAP SCR (GR 5)	3
19	141A-1014	5/16 X 1 3/4 UNC FLANGE BOLT (GRADE 8) O&P	4
20	141A-1208	3/8 X 1 UNC FLANGE BOLT (GRADE 8) O&P	5
21	14420C04	#8 X .500 CR PAN HEAD MACHINE SCREW	4
22	144N-0B16	10-32 X 2 ROUND HEAD MACH. SCREW	2
23	1470-0600	10-24 UNC HEX NUT (GR B)	6
24	1470-0C00	8-32 UNC HEX NUT (GR B)	4
25	1470-1000	5/16 UNC HEX NUT (GR B)	3
26	1480-1004	5/16 UNC TOP LOCK FL NUT (GR G) O&P	4
27	1480-1204	3/8 UNC TOP LOCK FL NUT (GR G) O&P	1
28	14870600	3/16 TYPE A PLAIN WASHER	6
29	14870800	1/4 TYPE A PLAIN WASHER	4
30	14871000	5/16 TYPE A PLAIN WASHER	2
31	1500-0078	BUMPER-RUBBER	4
32	1500-0193	FILTER-AIR	2
33	15000312	GROMMET-RUBBER, 1/2	1
34	15000915	COMPRESSOR-AIR, THOMAS	2
35	1505-0055	TERMINAL-RING, #10 STUD, 14-16	1
36	1505-0627	TERMINAL-RING, 5/16 STUD, 12-10	4
37	1505-1100	CONNECTOR-SLIDE, FEMALE, 14-16	1
38	1505-1106	CONNECTOR-BUTT (16-14G)	2
39	15050026	RELAY-SAMS	1
40	15050037	HARNESS-POWER, PANEL, AIR KIT	1
41	15050038	HARNESS-POWER, AIR KIT	1
42	15050039	HARENSS-CONTROL, PANEL, AIR KIT	1
43	15050041	HARNESS-CONTROL, AIR KIT, ULTRARIDE	1
44	1506-0042	10-32 KEP NUT	2
45	1506-0411	U-NUT, 1/4-20	4
46	6000-2019A	FITTING-INLET, AIR	1
47	80001495	TANK-AIR, WELDMENT	1
48	80001498	COVER-KIT, AIR, ULTRARIDE	1
49	800M1031	HOUSING-AIR KIT, ULTRARIDE, SPLIT	1

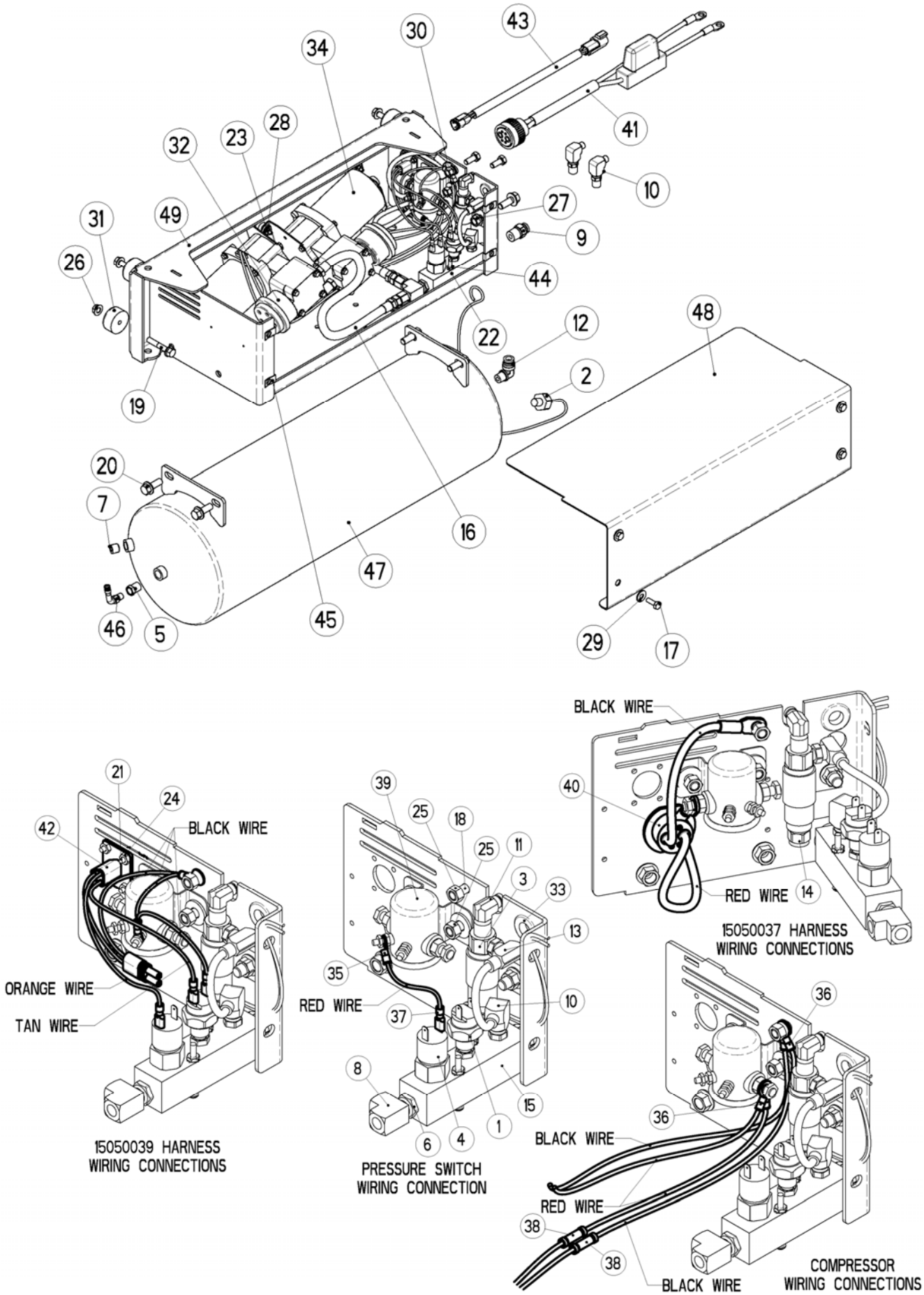
43
30
34
41
28
23
32
10
27
31
49
9
26
44
22
12
48
2
19
20
7
16
47
46
5
45
29
17
BLACK WIRE
21
24
42
BLACK WIRE
ORANGE WIRE
TAN WIRE
15050039 HARNESS
WIRING CONNECTIONS
39
25
18
25
11
3
33
13
35
RED WIRE
37
10
8
15
6
4
1
PRESSURE SWITCH
WIRING CONNECTION
40
RED WIRE
14
15050037 HARNESS
WIRING CONNECTIONS
36
36
BLACK WIRE
RED WIRE
38
38
BLACK WIRE
COMPRESSOR
WIRING CONNECTIONS

UltraRide® - 800M1033
AIR CONTROL KIT PARTS LIST

ITEM	PART NUMBER	DESCRIPTION	QTY
1	1301-0532	SWITCH-PRESSURE, 100/120	1
2	1301-0533	SWITCH PRESSURE, LOW	1
3	1301-0537	VALVE-DRAIN, 20" CABLE	1
4	13010535	VALVE-SOLENOID,3-WAY	1
5	1302-2014	REDUCER, 1/8 F-NPT 1/4 M-NPT	2
6	1302-2077	AIR FTG / PLUG (1/4 NPT)	1
7	1302-5050	CONNECTOR-MALE, 3/8 TB, 3/8 NPT	2
8	1302-5091	ELBOW, 1/4 TB 1/4 M-NPT, PUSH-IN DOT	3
9	1302-5100	ELBOW, 1/4 TB 1/8 M-NPT, PUSH-IN DOT	1
10	1302-5104	ELBOW-3/8 TB, 1/4 M-NPT	2
11	1302-5140	BRANCH TEE, 1/4 TB 1/8 M-NPT, DOT, P-IN	1
12	1302-9973	EXHAUST SHIELD, 1/8 M-NPT	1
13	13022066	HEX NIPPLE, 3/8 M-NPT	1
14	13025029	CONNECTOR-FEMALE, 1/2 TB, 1/4 F-NPT	1
15	13025051	CONNECTOR-MALE, 1/2 TB, 1/4 NPT	1
16	13029967	MANIFOLD-AIR, 3 PORT, 1/4 NPT	1
17	13029984	VALVE-CHECK, 3/8 FEMALE NPT	1
18	1401-0806	1/4 X 3/4 UNC HEX CAP SCR (GR 5)	4
19	1401-1006	5/16 X 3/4 UNC HEX CAP SCR (GR 5)	3
20	141A-1014	5/16 X 1 3/4 UNC FLANGE BOLT (GRADE 8) O&P	4
21	141A-1208	3/8 X 1 UNC FLANGE BOLT (GRADE 8) O&P	5
22	14301203	.375 X .375 SHOULDER BOLT	4
23	14420C04	#8 X .500 CR PAN HEAD MACHINE SCREW	4
24	144N-0B16	10-32 X 2 ROUND HEAD MACH. SCREW	2
25	1470-0C00	8-32 UNC HEX NUT (GR B)	4
26	1470-1000	5/16 UNC HEX NUT (GR B)	3
27	1480-1004	5/16 UNC TOP LOCK FL NUT (GR G) O&P	8
28	1480-1204	3/8 UNC TOP LOCK FL NUT (GR G) O&P	1
29	14870800	1/4 TYPE A PLAIN WASHER	4
30	14871000	5/16 TYPE A PLAIN WASHER	2
31	1500-0078	BUMPER-RUBBER	4
32	1500-0193	FILTER-AIR	1
33	15000195	COMPRESSOR-AIR, THOMAS	1
34	15000312	GROMMET-RUBBER, 1/2	1
35	15000324	GROMMET-RUBBER, 3/8	4
36	1505-0055	TERMINAL-RING, #10 STUD, 14-16	1
37	1505-0627	TERMINAL-RING, 5/16 STUD, 12-10	2
38	1505-1100	CONNECTOR-SLIDE, FEMALE, 14-16	1
39	15050026	RELAY-SAMS	1
40	15050037	HARNESS-POWER, PANEL, AIR KIT	1
41	15050038	HARNESS-POWER, AIR KIT	1
42	15050039	HARENSS-CONTROL, PANEL, AIR KIT	1
43	15050041	HARNESS-CONTROL, AIR KIT, ULTRARIDE	1
44	1506-0042	10-32 KEP NUT	2
45	1506-0411	U-NUT, 1/4-20	4
46	6000-2019A	FITTING-INLET, AIR	1
47	80001495	TANK-AIR, WELDMENT	1
48	80001498	COVER-KIT, AIR, ULTRARIDE	1
49	800M1031	HOUSING-AIR KIT, ULTRARIDE, SPLIT	1

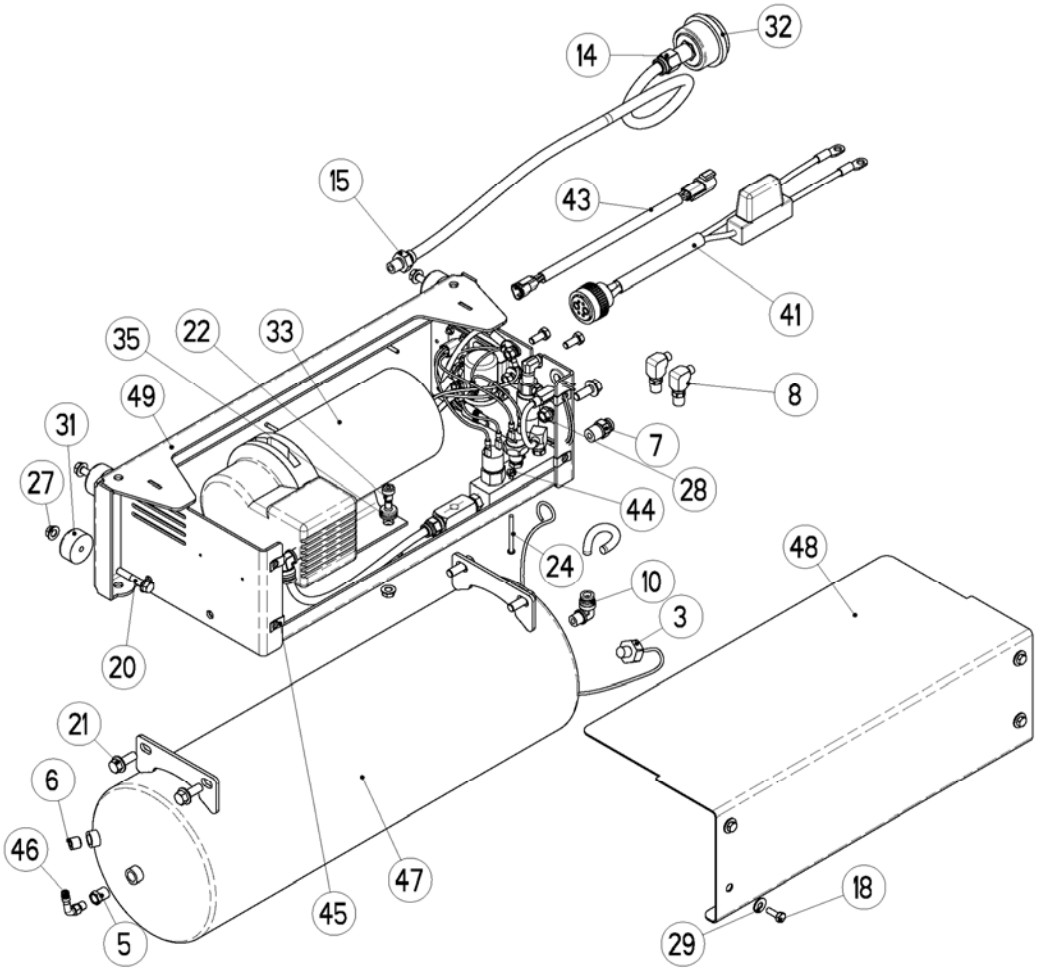

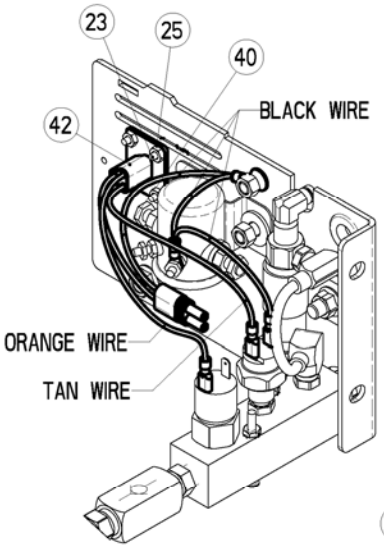

15050039 HARNESS
WIRING CONNECTIONS

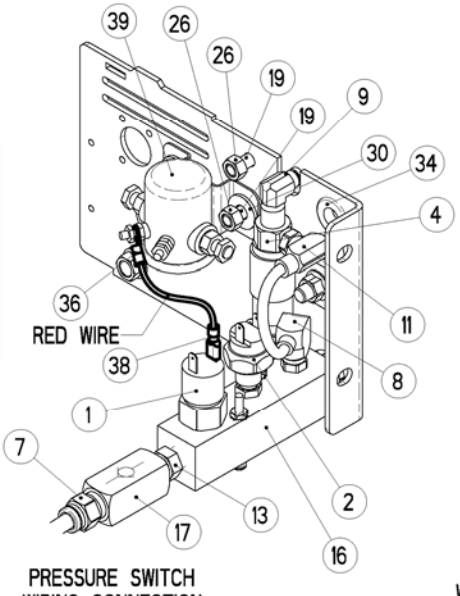

PRESSURE SWITCH
WIRING CONNECTION

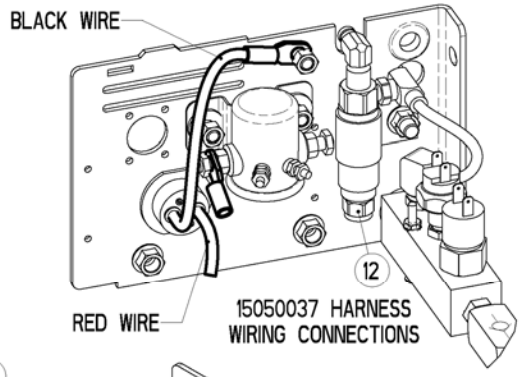

15050037 HARNESS
WIRING CONNECTIONS

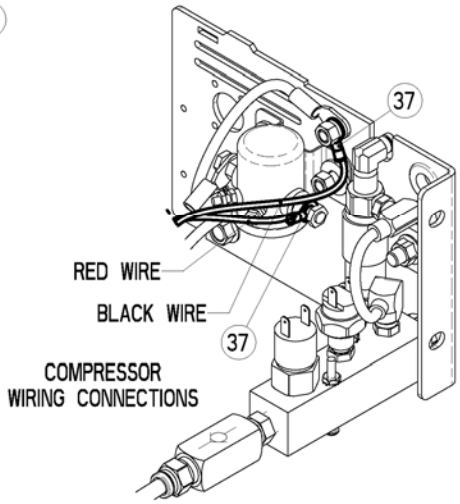

COMPRESSOR
WIRING CONNECTIONS

UltraRide® - 800M1074

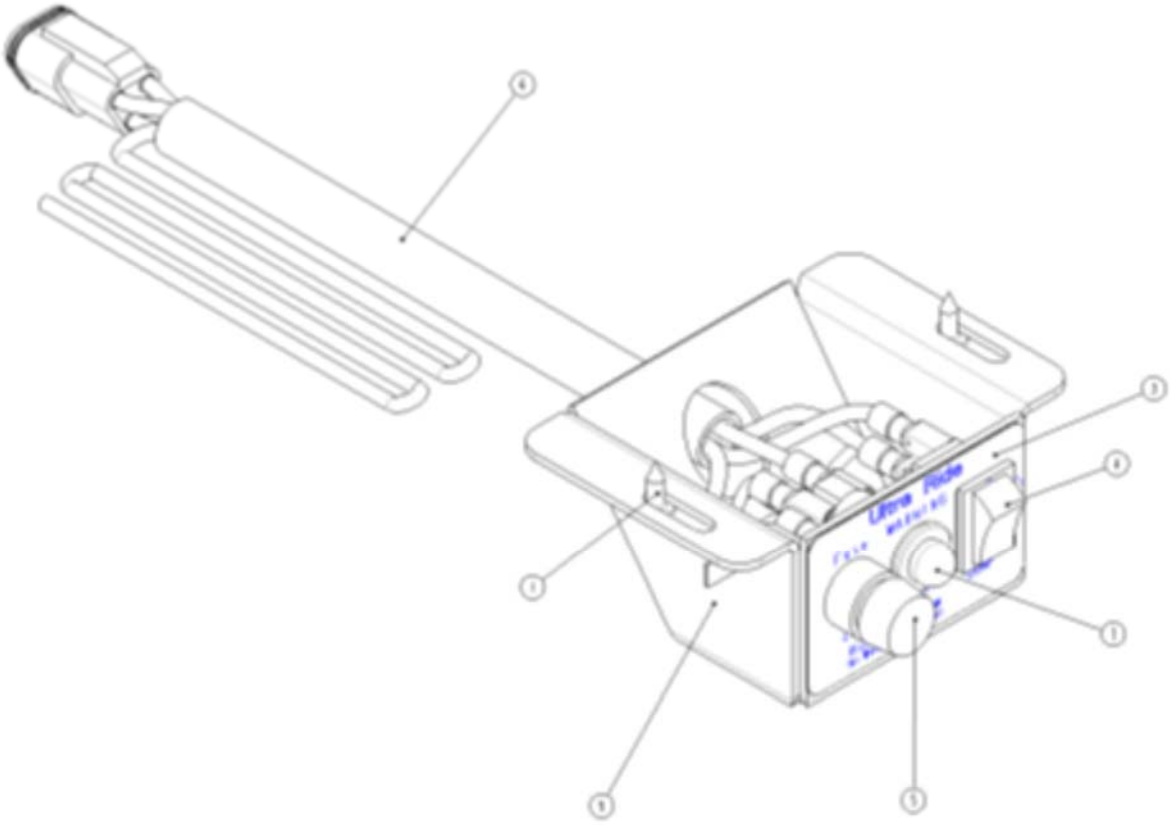

ITEM	PART NUMBER	DESCRIPTION	QTY
1	14590C07	NO. 8 X .438 PHIL-PAN SHEET	2
2	15001255	BOX(4.25 X 2.50 X 8.00)	1
3	15001828	LABEL-AIR CONTROL, ULTRA RIDE	1
4	1505-0207	SWITCH-ROCKER	1
5	1505-1883	FUSE HOLDER, PANEL STYLE	1
6	15050040	HARNESS-CONTROL, ULTRARIDE	1
7	15050053	LIGHT-LED 12V	1
8	15051872	2 AMP FUSE	1
9	80002161	PANEL-MOUNT, SWITCH	1

UltraRide® - 80001515 OPTIONAL INSIDE FRAME MOUNTING ADAPTER BRACKET

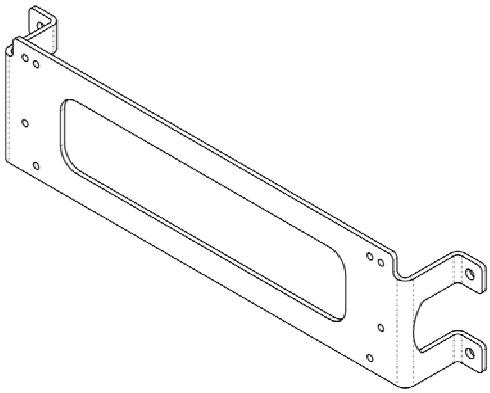

ULTRARIDE® - 800M0209 PARTS
OPTIONAL AUTOMATIC DRAIN KIT

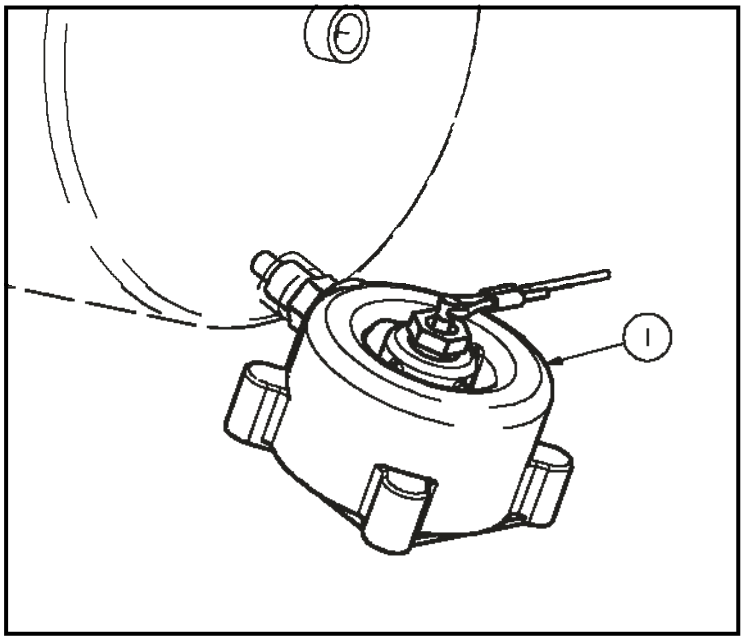

ITEM	PART NUMBER	DESCRIPTION	QTY
1	13010558	VALVE-DRAIN, AUTOMATIC	1

ULTRARIDE® - 800M0211 PARTS
OPTIONAL HEATED AUTOMATIC DRAIN KIT

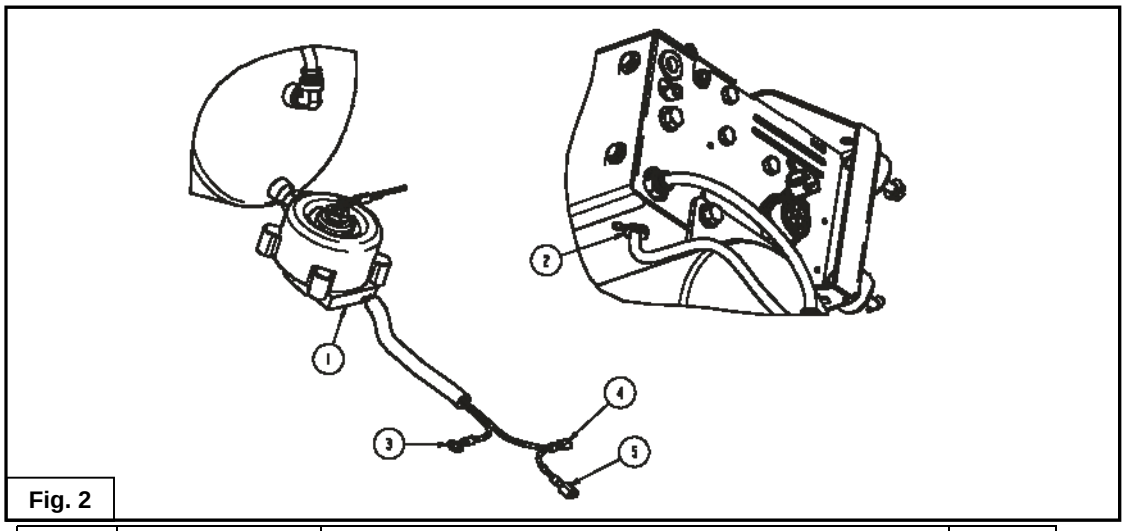

Fig. 2

ITEM	PART NUMBER	DESCRIPTION	QTY
1	13010558	VALVE-DRAIN, AUTOMATIC	1
2	15000324	GROMMET-RUBBER, 3/8	1
3	1505-0627	TERMINAL-RING, 5/16 STUD, 12-10	1
4	1505-1100	CONNECTOR-SLIDE, FEMALE, 14-16	1
5	1505-1101	CONNECTOR-SLIDE, MALE, 14-16	1

OWNER GUIDELINES

The UltraRide® Air Control Kits need no lubrication and little maintenance. However, immediate corrective action should be taken if a serious malfunction occurs.

CAUTION! If maintenance or service is to be done on the air system, be sure to drain all air from the system. Serious injury could occur if components are removed while system is full of air.

PRODUCT OWNER RESPONSIBILITIES

- Owner is solely responsible for pre-operation inspection, periodic inspections, maintenance, and use of the product as specified in the particular LINK MFG. instructions available by product model, except as provided in this warranty, and for maintenance of other vehicle components.
- Owner is responsible for "down time" expenses, cargo damage, and all business costs and losses resulting from a warrantable failure.

Maintenance Note: **It is important to release any moisture contained within the air reservoir on a daily basis.** This can be done by pulling on the cable attached to the drain valve. Not releasing the moisture on a regular basis will cause the drain valve to not operate properly, and may cause the valve to malfunction. Excess moisture in the system can also cause premature failure of other components including the tank itself.

Operational Notes:

- LOW PRESSURE light indicates low air pressure in the system resulting from possible system leak and correction action should be taken immediately.

CHECK AT EVERY VEHICLE SERVICE INTERVAL:

- Check for air leaks around fittings
- Check air filter; replace if necessary

CHECK AFTER EVERY 30,000 MILES:

- Change motor brushes on compressor

UltraRide® -TROUBLESHOOTING GUIDE

COMPONENT	POSSIBLE PROBLEM	CORRECTIVE ACTION
Airlines	Air leaks	Replace airline
Fittings	Air leaks	Remove fitting and apply fresh joint compound. Reinstall fitting, but **Do Not Over tighten. Do not use Teflon tape.**
Compressor	**A.** Doesn't turn on **B.** Doesn't turn off	**A.** Check all electrical connections between the dash controls, switches, accessory power wire, and air control box. Verify power to the compressor relay, and through other electrical systems as listed. If power to relay exists, compressor switch is turned "ON", and the Compressor Pressure Switch operates properly, replace Compressor Relay or the compressor. **B.** Replace Compressor Pressure Switch or the compressor.
Compressor Pressure Switch	**A.** Loose terminal connections **B.** Doesn't turn compressor on **C.** Air leaks	**A.** Tighten securely. **B.** Verify operation of switch by placing a jumper wire between connections 130 & 140 on the circuit board (see Fig. 11-5). If compressor does not operate, check other potential components. If compressor runs, replace Compressor Pressure Switch. **C.** Remove switch and apply fresh joint compound. Reinstall switch, but **Do Not Over- tighten. Do not use Teflon tape.**
Low Pressure Warning Switch	**A.** Loose terminal connections **B.** Doesn't turn warning light on (i.e. when tank is empty) **C.** Air leaks	**A.** Tighten securely. **B.** Verify operation of switch by placing a jumper wire between connections 110 & 120 on the circuit board (see Fig. 11-5). If warning light does not turn on, check other potential components. If warning light turns on, replace Low Pressure Switch. **C.** Remove switch and apply fresh joint compound. Reinstall switch, but **Do Not Over- tighten. Do not use Teflon tape.**
Electrical System	**A.** No power to the Air Control Box **B.** Circuit breaker will not reset **C.** No power to dash controls	**A.** Make sure cable connections to the battery are tightened securely and are not severely corroded. Make sure nothing has cut the wiring harness and caused an electrical short. Replace wire harness. **B.** Make sure that the wire harness or circuit board is not shorting out. Replace circuit breaker. **C.** Secure connection between the main wire harness and dash control wire harness. Check connections between the dash control switches and the wire connectors. Verify power from the accessory wire by connecting test light between the *white* & *black* color wires on the wire harness (key must be in ignition and turned on or to the accessory position). If no power, replace wire harness. If power exists, replace "key hot" relay. If no power, check the circuit board for burned up electrical trace. Replace circuit board.
Dash Switches (Compressor & Dump function)	**A.** Switches do not operate properly **B.** Light in switch is burned out	**A.** Check all electrical connections between the dash control switches and the electrical harness. Replace switch. **B.** Replace switch.

APPENDIX A

WIRING DETAIL FOR F-SERIES FORD VEHICLES

Harness Routing:

One option in routing the harness is to run the harness under the floor-pan of the passenger's side, and through the grommet in the passenger side floor, if available. The harness can then run under the floor covering and behind the dash. See Figure A-1.

FIG. A-1

Key Hot Wire Selection:

For '99 and newer **Ford** vehicles, the PTO 12-volt power source wire provides an adequate "key hot" wire for the UltraRide® Air Kit. This wire does not have any terminals attached to it, and is part of the OE supplied Power Take-Off Circuits. To verify the correct wire, use a test light or multimeter. The selected wire should only be "hot" when the ignition switch is on.

For **pre-2002** model year vehicles, the wire is Circuit Number **295** and has a wire color of **light blue and pink**.

For **2002—2007** model year vehicles, the wire is Circuit Number **294** and has a wire color of **white and light blue**. This wire can be found blunt-cut & taped, on the harness behind the Diagnostic Link Connector (below and to the RIGHT of the steering wheel). See Figures A-2 and A-3.

For **2008 and newer** model year vehicles, the wire is Circuit Number **CBP44** and has a wire color of **purple**. This wire can be found blunt-cut & taped, on the harness behind the Diagnostic Link Connector (below and to the LEFT of the steering

FIG. A-2

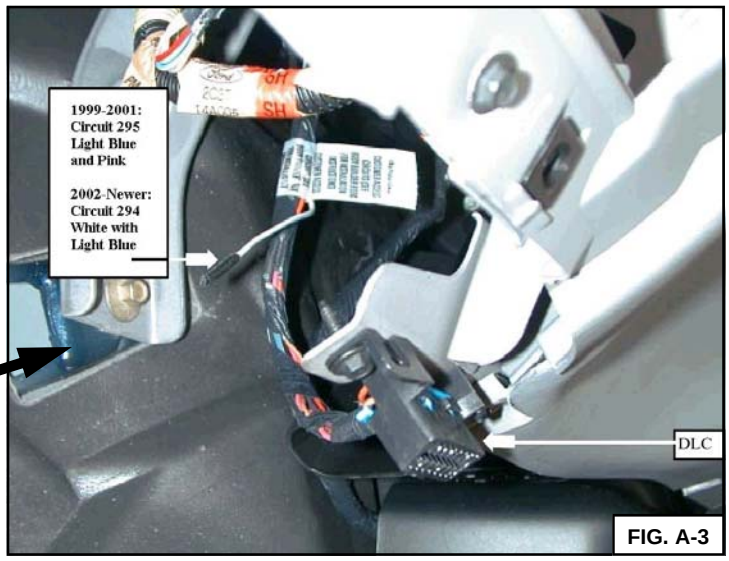

FIG. A-3

APPENDIX B

WIRING DETAIL FOR GMC VEHICLES

Harness Routing:

Another option in routing the harness is to run the harness from the battery, up through the grommeted hole in the passenger side bulkhead. The harness can then run under the floor covering and behind the dash.
See Figures B-1, B-2, & B-3.

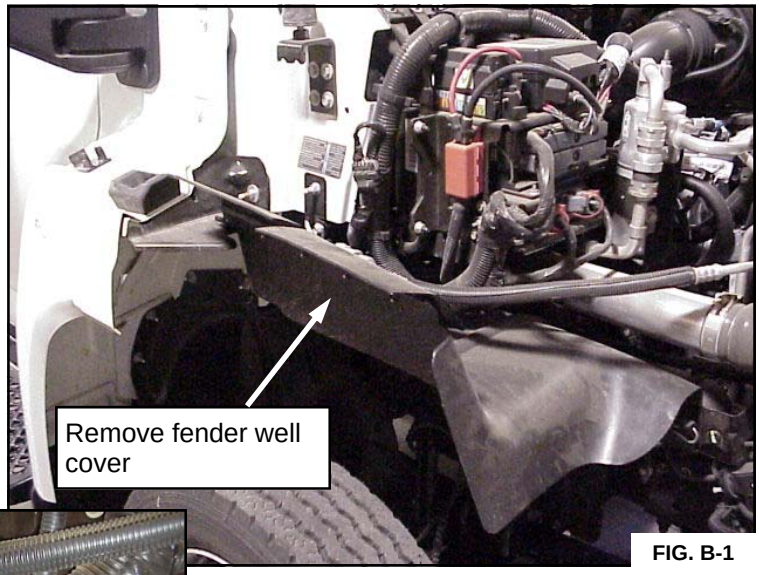

FIG. B-1

FIG. B-2

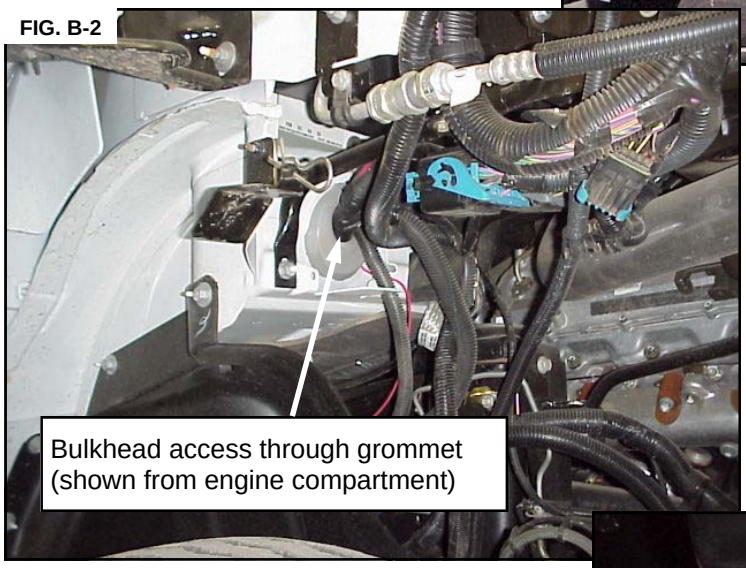

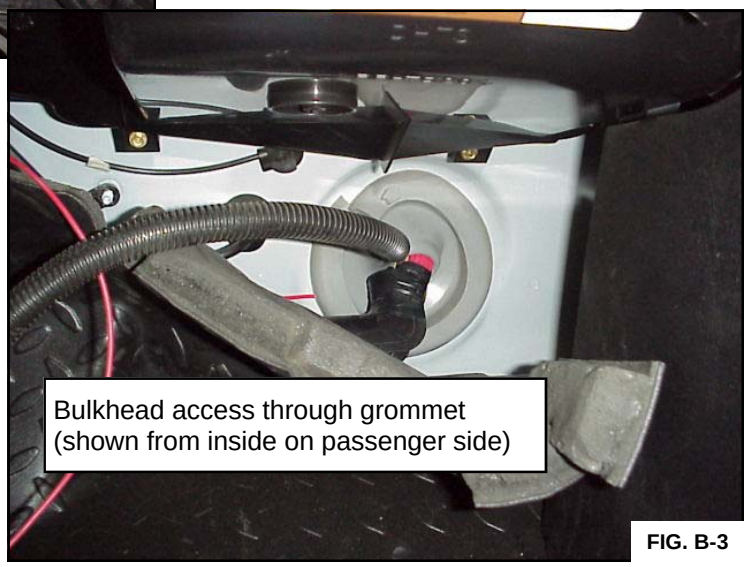

FIG. B-3

APPENDIX B (CONTINUED)

Key Hot Wire Selection:

For GMC vehicles, any wire connected to IGN4 provides an adequate “key hot” wire for the UltraRide® Air Kit. One such wire that can be used is connected to the Clutch Pedal Position Switch located behind the left front kick panel. This wire is hot and fused with the ignition key in the “RUN” position. It may be necessary to remove the kick panel to access this connector. See Figures B-4 and B-5.

To verify the correct wire, use a test light or multimeter. The selected wire should only be “hot” when the ignition switch is on.

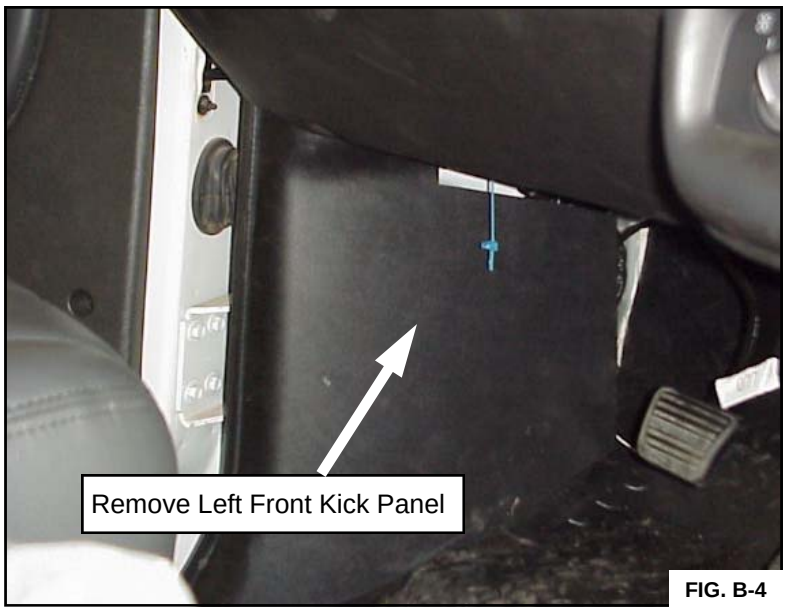

FIG. B-4

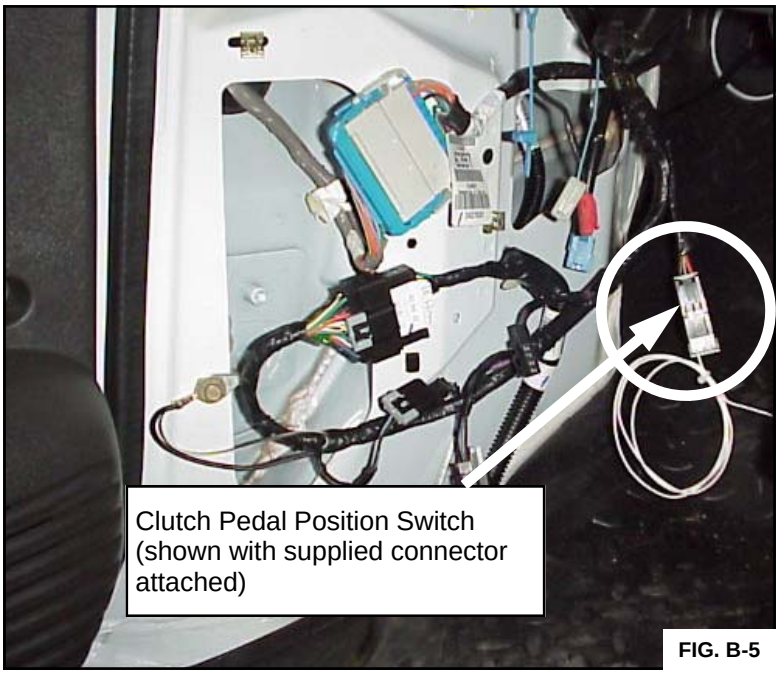

FIG. B-5

Link Mfg. Ltd.
223 15th St. NE
Sioux Center, IA USA
51250-2120

(712) 722-4874

http://www.linkmfg.com/